For Product Step File or 3D Model Send a Request Mail To info@nrack.com

INOX AISI 3..

NEW

Photo View

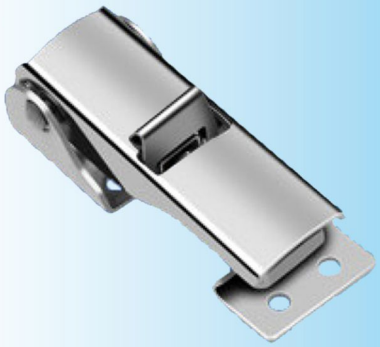

3D Rendered View

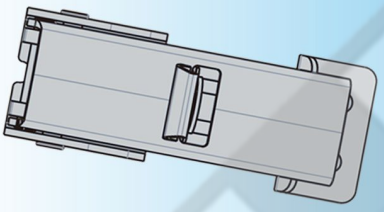

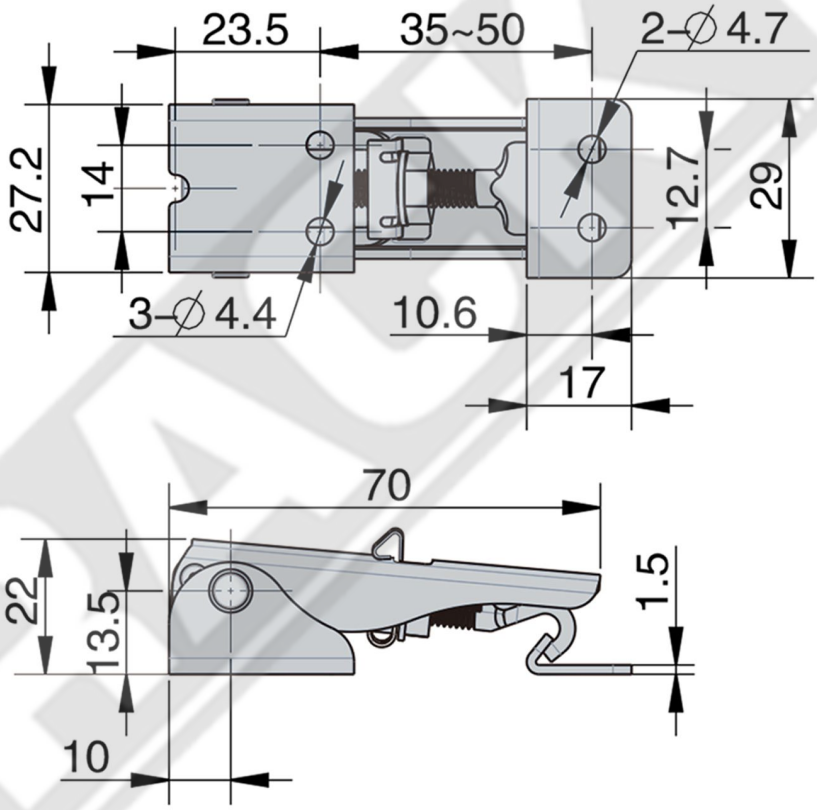

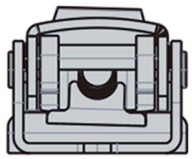

DK 113 - 2

- Material: Stainless Steel
- Finish: Vibrating Polish

Website: www.nrack.com (TEL) +91 80 231 88071, 094484 77572 E-mail: info@nrack.com